Photo and illustration is of a **49903**

Vandal Resistant DPW Deluxe Bib Tap - Ablution

Standard

- Deluxe Bib Tap with Ablution Outlet DPW (NSW)
- Vandal resistant handles, loose jumper valve, ablution outlet nozzle and 9LPM flow regulator
- Option of ½ turn ceramic disc
- 3 Star WELS rating

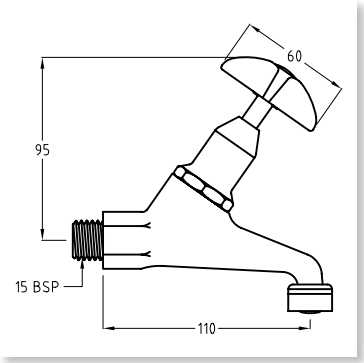

WaterMark
AS/NZS 3718 Lic. WMKA0034
SAI Global

Code	Operation	Finish
49903 (Cold)	Jumper Valve	Chrome

Photo and illustration is of a **49906**

Vandal Resistant DPW Deluxe Bib Tap - Aerator

Standard

- Deluxe Bib Tap with Aerator DPW (NSW)
- Vandal resistant handle, loose jumper valve, vandal resistant aerator and 8LPM flow regulator
- Option of a ½ turn ceramic disc
- 3 Star WELS rating

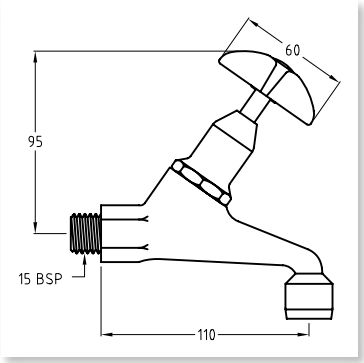

WaterMark
AS/NZS 3718 Lic. WMKA0034
SAI Global

Code	Operation	Finish
49906 (Cold)	Jumper Valve	Chrome

Photo and illustration is of a **49920** & **49924**

Vandal Resistant Washing Machine Tap

Standard

- Vandal resistant handle and loose jumper valve
- Option of ½ turn ceramic disc

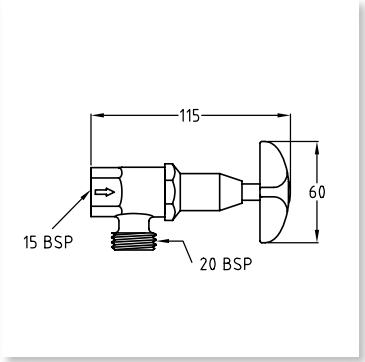

WaterMark
AS/NZS 3718 Lic. WMKA0034
SAI Global

Code	Operation	Finish
49920 (Cold)	Jumper Valve	Chrome
49924 (Hot)	Jumper Valve	Chrome
49820 (Cold)	Ceramic Disc	Chrome
49825 (Hot)	Ceramic Disc	Chrome

© Galvin Engineering Pty Ltd: 2010