Photo and illustration is of a **49910**

Vandal Resistant DPW Basin Set
- Fixed Gooseneck

- Basin Set with Fixed Gooseneck Spout DPW (NSW)

Standard

- Vandal resistant handles, adjustable breech, loose jumper valve, fixed gooseneck spout, vandal resistant aerator and 6LPM flow regulator
- Option of ½ turn ceramic disc
- 5 Star WELS rating

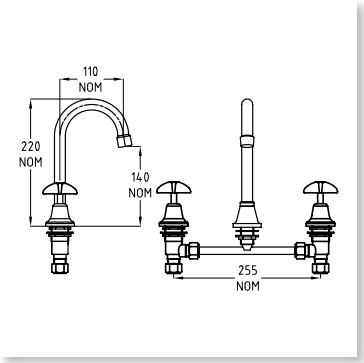

WATER RATING 6 Stars per minute

WaterMark
AS/NZS 3718 Lic. WMKA0034
SAI Global

Code	Operation	Finish
49910	Jumper Valve	Chrome

Photo and illustration is of a **49942**

Vandal Resistant DPW Hob Sink Set
- Fixed Gooseneck (200)

- Hob Sink Set with Fixed Gooseneck 200mm Spout DPW (NSW

Standard

- Vandal resistant handles, adjustable breech, swivel gooseneck spout and 6LPM flow regulator
- Option of ½ turn ceramic disc
- 5 Star WELS rating

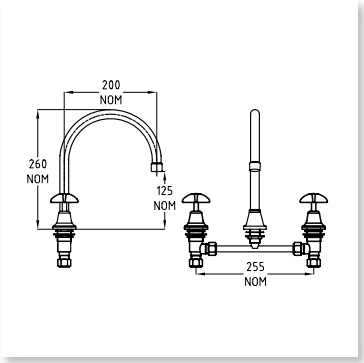

WATER RATING 6 Stars per minute

WaterMark
AS/NZS 3718 Lic. WMKA0034
SAI Global

Code	Operation	Finish
49942	Jumper Valve	Chrome

Photo and illustration is of a **49944**

Vandal Resistant DPW Wall Sink Set - Fixed Spout

- Wall Sink Set with Fixed Spout DPW (NSW)

Standard

- Vandal resistant handles, loose jumper valve, fixed wall spout 165mm and vandal resistant aerator
- Option of ½ turn ceramic disc
- 5 Star WELS rating

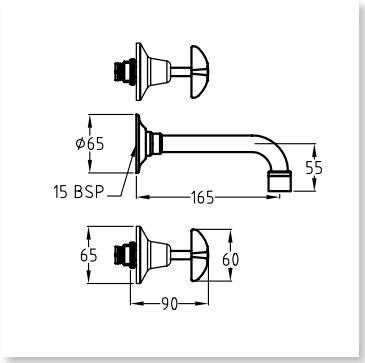

WATER RATING 6 Stars per minute

WaterMark
AS/NZS 3718 Lic. WMKA0034
SAI Global

Code	Operation	Finish
49944	Jumper Valve	Chrome

© Galvin Engineering Pty Ltd: 2010