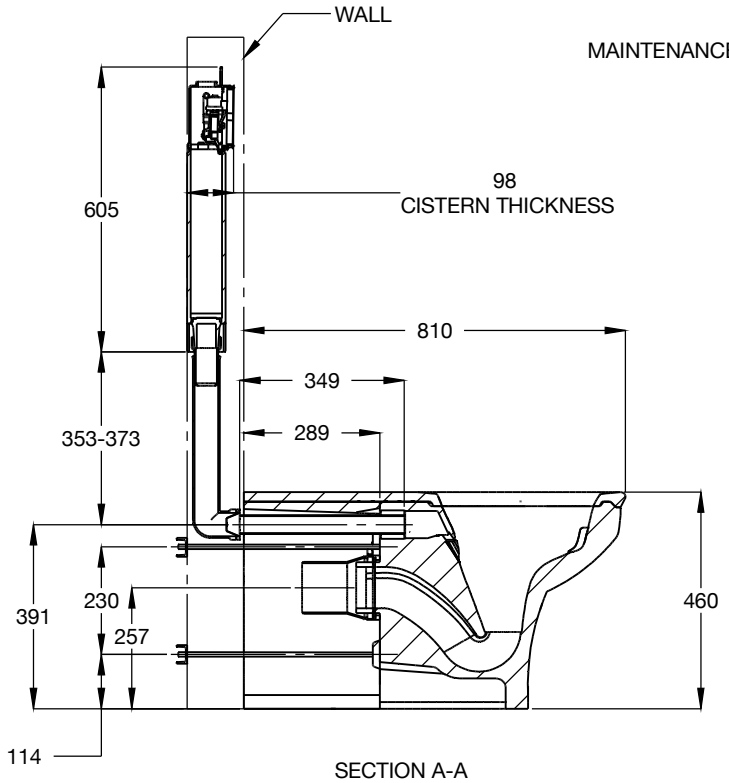

SECTION A-A

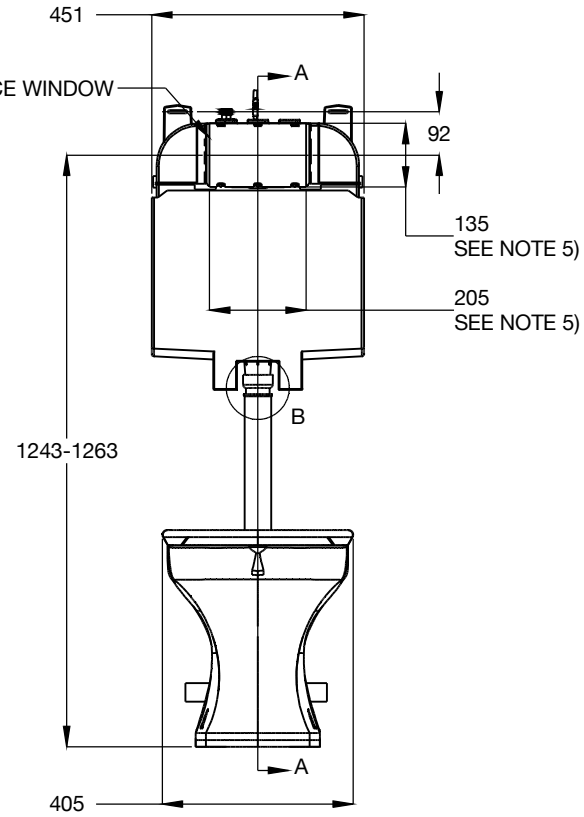

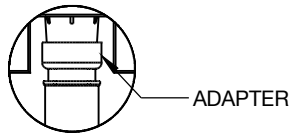

DETAIL B

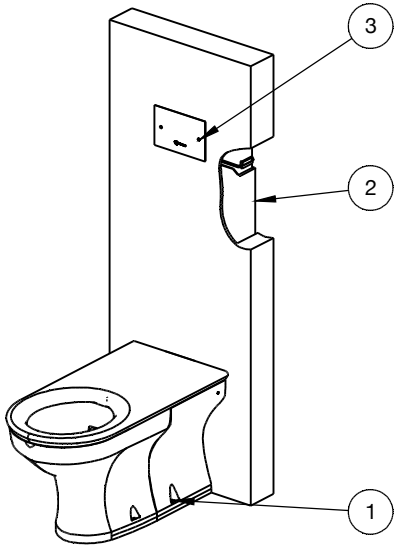

NOTES:

1) PAN ADAPTOR PROVIDED WITH PAN.
2) REFER TO PAN & CISTERN INSTALLATION MANUAL FOR CORRECT & FIXINGS & INSTALLATION.
3) DRAWINGS USED AS A GUIDE ONLY & SUBJECT TO CHANGE.
4) THIS CISTERN REQUIRES A GPO & ELECTRONIC COMPONENTS TO BE INSTALLED IN A ACCESSIBLE LOCATION FOR MAINTENANCE.
5) HOLE FOR MAINTENANCE WINDOW- REFER TO INSTALLATION INSTRUCTION OF INSTALL COVER PLATE (3) .

ITEM	ITEM NUMBER	DESCRIPTION	MATERIAL	QTY.
3	656550	SS ANTI-VANDAL INWALL OLI CISTERN SERVICE ACCESS PLATE	-	1
2	SCPK01-PB-CIST19	WALLGATE WC ELECTRONIC CISTERN PACK FOR 1 WC, PIEZO ACTIVATED - SINGLE BUTTON DUAL FLUSH	-	1
1	CWC-155W-AST-BCA	WALLGATE ANTI-LIGATURE, ANTI-VANDAL S/SURFACE BTW PAN S&P W/ WHITE INTEG SEAT 446X702	-	1

REV	DESCRIPTION	DATE	APPD
0	APPROVED FOR INSTALLATION INSTRUCTION.	07/09/2022	BG

MATERIAL: # REFER TO BOM

WEIGHT: 53038.09g

REVISION: 0

FINISH: AS SHOWN

UNLESS OTHERWISE STATED ALL DIMENSIONS IN MM TOLERANCES: X ±1.0, X.X ±0.5, XX ±0.05

IF IN DOUBT ASK

DRN BV 26/08/2022

CKD JRR

APPD BG

ISSUED

TITLE: INSTALLATION INSTRUCTION FOR CWC-155W-AST-BCA + SCPK01-PB-CIST19 + 656550

MANUFACTURED TO: AS/NZS 2280

SCALE: NOT TO SCALE

SHEET 1 OF 1

DRAWING NO: 001.20.00.01

GalvinEngineering the mark of reliability

410 VICTORIA RD MALAGA WA ABN: 76 008 719 382

© COPYRIGHT RESERVED. THIS DRAWING IS THE PROPERTY OF GALVIN ENGINEERING AND SHALL BE RETURNED ON DEMAND. IT MUST NOT BE REPRODUCED, COPIED OR COMMUNICATED TO ANY OTHER PARTY NOR BE USED FOR ANY PURPOSE OTHER THAN STATED IN THE PARTICULAR ENQUIRY, ORDER OR CONTRACT WITH WHICH IT IS ISSUED.

FORM 07-03.13